Advanced Virgo + Filter Cavity End Mirror Characterization

Reference LMA : C20092 + C20087

Substrate Reference : FC n°4

Laboratoire des Matériaux Avancés
Bâtiment Virgo – CNRS – IN2P3
7, Avenue Pierre de Coubertin
69622 – Villeurbanne Cedex - France

December 2020

Filter Cavity End Mirror Substrate Drawings

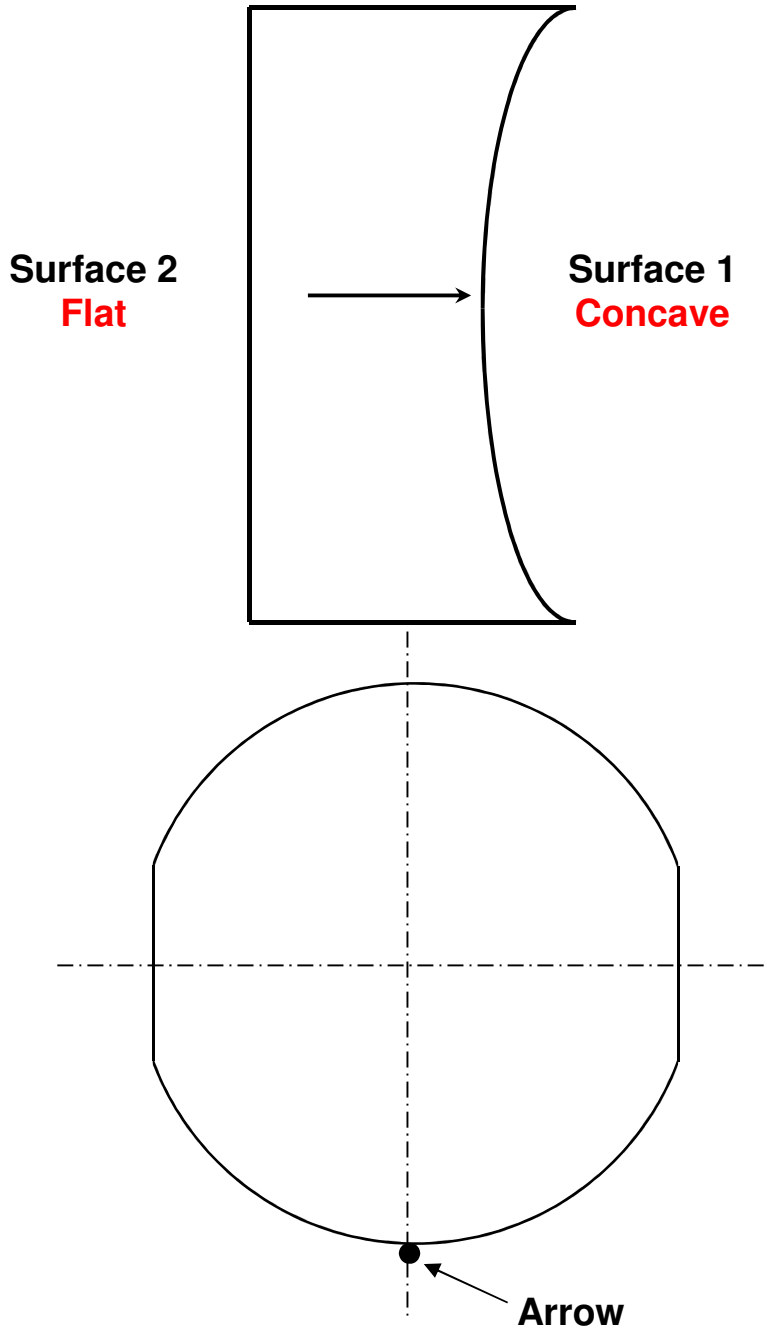

<u>Signification of the ARROW etched on the edge of the substrate:</u>

- **It shows Surface 2**

<u>Nota :</u>
The arrow on the substrates is always at the bottom of the mappings (wavefront, scattering, transmission).

Serial Number: C20092 + C20087

		Advanced VIRGO + Requirements	LMA Measurements
Outside Diameter (mm)		150 +/- 0.1	149.9 +/- 0.1
Thickness (mm)		90 +/- 0.1	90 +/- 0.1
Coating Nature	Surface 2	Antireflective Coating @1064 nm and @532 nm ∅140 mm	x
	Surface 1	High Reflectivity Coating @1064 nm and @532 nm ∅140 mm	x
Flatness R.M.S. (power removed) Surface 1		< 2 nm RMS ∅50 mm	2.70 nm RMS ∅120 mm 0.67 nm RMS ∅50 mm
Radius of Curvature (m) Surface 1		558 +/- 10 m ∅120 mm and ∅50 mm (concave)	562.7 +/- 0.2 m ∅120 mm 559 +/- 0.9 m ∅50 mm
Average Scattering (4° incidence) at 1064 nm Surface 1		-	8 ppm ∅ 80 mm
Absorption HR at 1064 nm Surface 1		-	1.4 ppm (witness sample)
Reflectivity AR Surface 2 at 1064 nm		<200 ppm	7.6 +/- 4 ppm ∅ 80mm
Reflectivity AR Surface 2 at 532 nm		<500 ppm	515 ppm Mirror center
Transmission at 1064 nm (3° incidence)		< 5 ppm	3.16 ppm +/- 0.01 ppm ∅ 80mm
Transmission at 532 nm (3° incidence)		T = 3 +/- 1.5 %	2.7% Mirror center

Comments:
The optical losses (absorption+scattering) are compliant with the specification < 10 ppm.

Wavefront Surface 1 (HR) (∅120 mm)

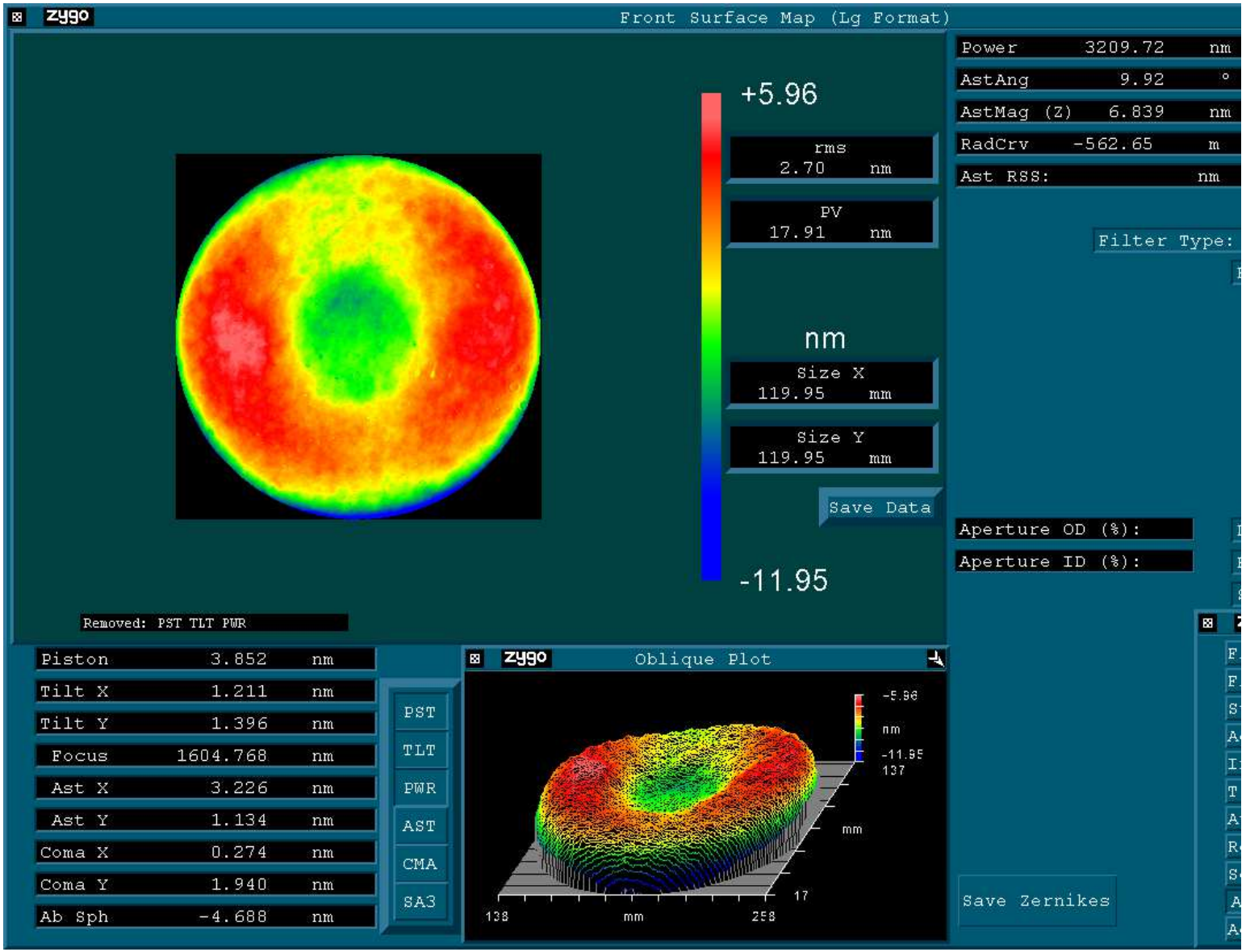

Wavefront Surface 1 (HR) (∅50 mm)

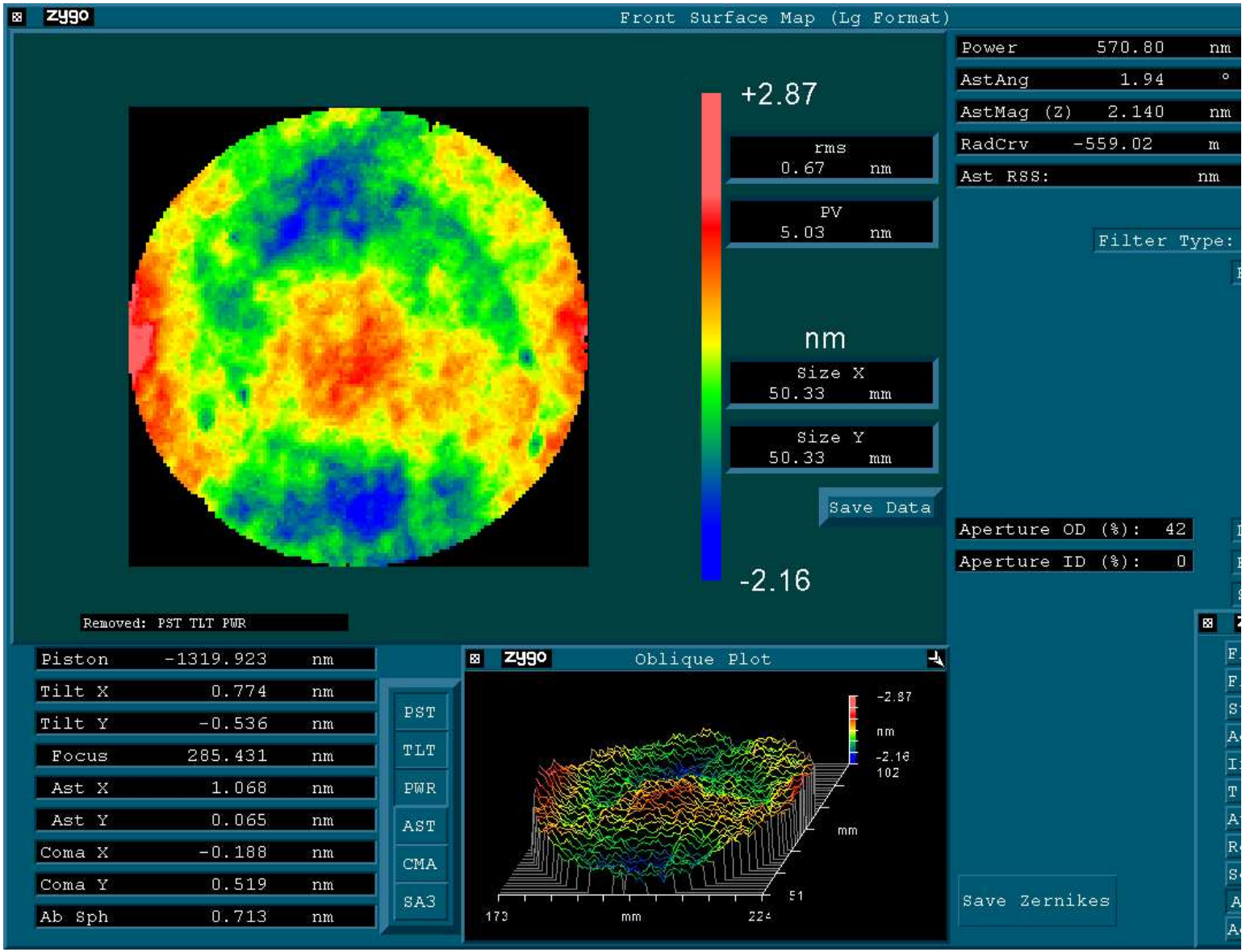

Transmission in ppm at 1064 nm (∅80 mm)

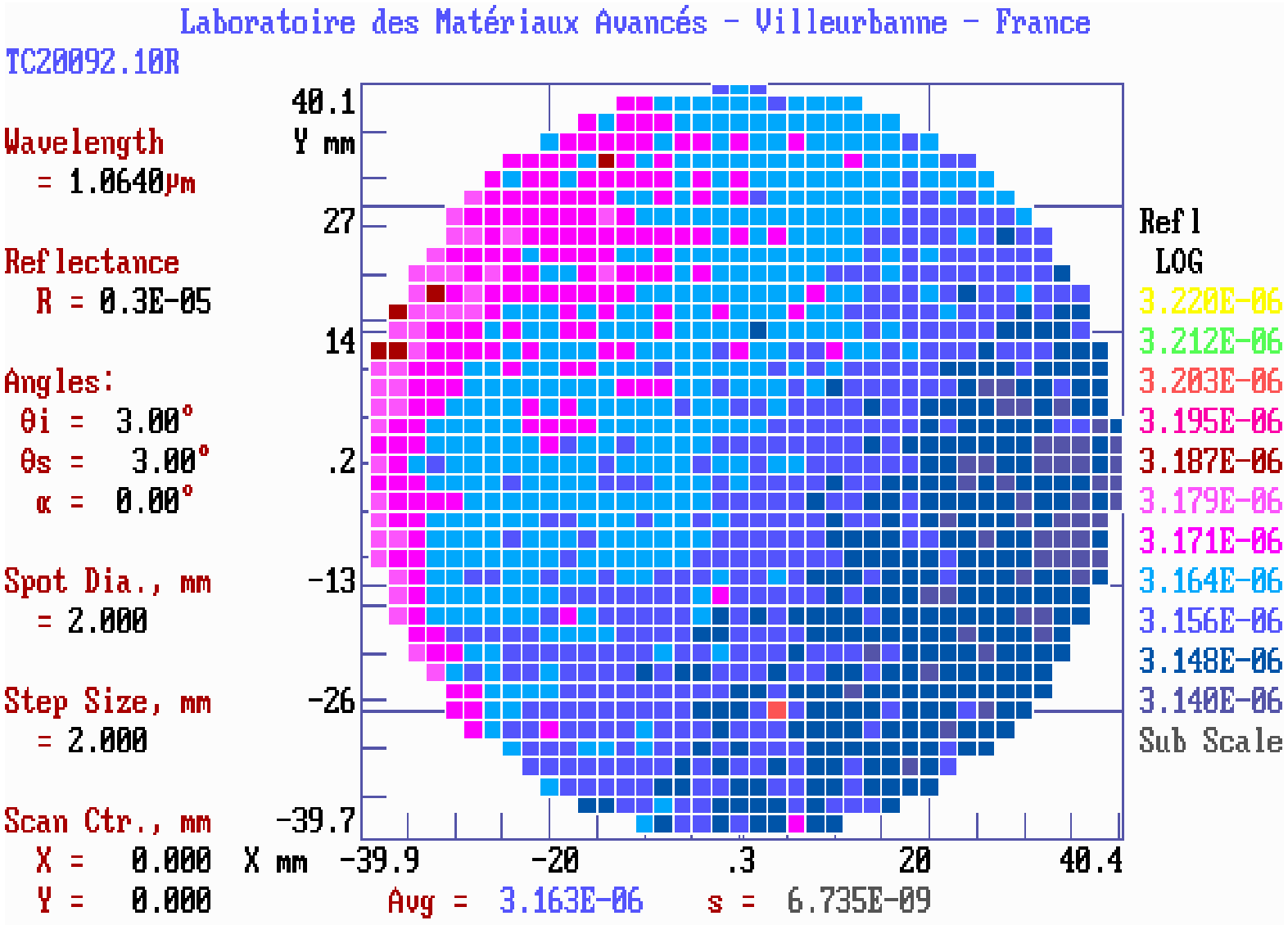

Average Scattering at 1064 nm Surface 1 HR (∅80 mm)

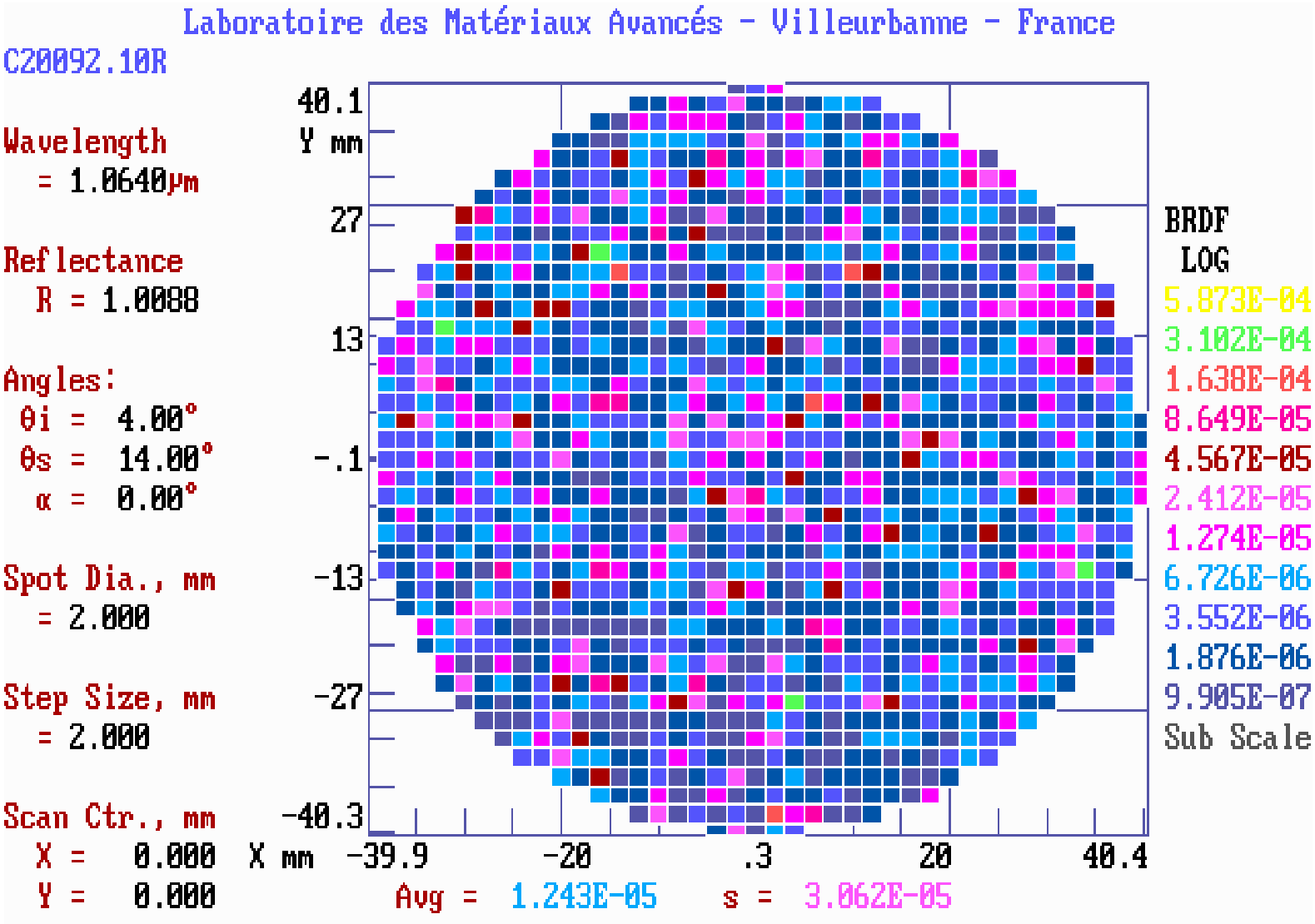

Reflectivity map in ppm Surface 2 (AR) at 1064 nm (∅120 mm)